CTS - M17

CTS - M17 SERIES COMBUSTIBLE GAS TRANSMITTER/SENSOR

The CTS-M17 Series is a microprocessor based transmitter. It uses a Catalytic Pellistor Bead gas sensor to detect methane or propane gas. Typical applications are buildings built on landfill sites to monitor methane and parking garages to monitor propane leaks. QEL Engineers, through extensive research and development, have designed the M17 to be an industry leader in performance and application. The M17 offers good value. Standard features within the M17 can only be found as expensive options in other manufacturers' product. A digital display (LCD), push-button programming and on board meter jacks are all standard. The transmitter provides an analog output of 4-20 mA DC or 2-10 VDC, linear to the measured gas range, for transmission to the Building Automation System (BAS) or controller supplied by QEL or others. The signal is fully user assignable over the gas range and can be configured for rising or falling gas concentration. In addition, RS-485 communication is built in. Input voltages of 24 VDC or 24 VAC with wide tolerances are acceptable. Relay setpoints may be set as increasing or decreasing actuation simply by adjusting the deadband relationship. Set the deactuation point above the actuation setpoint and the M17 will automatically alarm on decreasing concentrations. Relay setpoints are always present even though the relays themselves are an option. Calibration is very easy - simply apply the cal gas and adjust the potentiometer to the desired reading on the display. The standard enclosure is a fire retardant Polycarbonate / ABS blend.

MODEL NUMBER ORDERING CODE

C	T	S	-	M	1	7			X	-	Q	0			0	0	0

Gas Type (See Gas Selection Table for #)

Revision (Factory Provided) — X

Enclosure - Wall Mount — Q

Options (Enter 0 for No Selection)

Relays (2 x SPDT & Buzzer) — R

Conformal Coating — W

GAS SELECTION TABLE

Gas Type	#	100% LEL In % Volume
Methane CH_4	**10**	5.0%
Propane C_3H_8	**30**	2.1%
Other	**Advise**	Advise

PRINCIPLE OF OPERATION

Sensor assemblies consist of two matched pellistor beads, each encasing a coiled platinum wire. One of the beads is coated with platinum as a catalyst. Both elements are exposed to the same environmental conditions and heated with the platinum wire. The elements are connected to two nodes of a Wheatstone Bridge on the transmitter electronics, measuring the resistance of each element. When combustible gas is introduced to the elements, the catalyst coating on one bead will cause oxidation. This reaction will in turn raise the temperature of the element thereby increasing the resistance. This oxidation cannot occur without the coating. The resultant difference in resistance is proportional to the concentration of the combustible gas. The electronics provide a null adjustment to balance the resistance of the sensor elements in cleans air conditions. The resistance differential is linearized and converted to a 4 - 20 mA DC signal proportional to a 0 to 100% LEL concentration of the target combustible gas. Zero and span adjustments are provided to calibrate the transmitter for a specific combustible gas.

SPECIFICATIONS

Input Power: 24 Volts AC Floating
24 Volts AC One side grounded
24 Volts DC

Enclosure Materials: Polycarbonate / ABS blend
Fire Retardant

Temperature: -10º C to 50º C

Humidity: Continuous, 0 to 95% RH, non-condensing
Intermittent, 0 to 99% RH, non-condensing

Pressure: Atmospheric ±10%

Response Time: Less than 10 seconds to 50% of step change
Less than 30 seconds for 90% of step change

Accuracy: ± 2% LEL

Repeatability: ± 2% LEL

Factory Set Range: Methane: 0 - 100% LEL
Propane: 0 - 100% LEL

Sensor Type: Catalytic Bead

Sensor Life: Greater than 5 years in a clean environment

Output Signal *: (user selectable) Analog, 4-20 mA or 2-10 VDC (linear)
Digital, RS-485

Display: Alphanumeric - 2 line X 8 digit LCD

Relay & Buzzer: (optional) Two, Single pole double throw (SPDT),
Form C,1 amp dry contact
CSA 1500 V FCC Part 68
85dB @ one foot

Time Delays: Actuation - 0 to 60 minutes in 5 minute increments
De-Actuation - 0 to 60 minutes in 5 minute increments

Mounting: Screw mounts to a standard 2″ X 4″ electrical junction box.

Approval: (Pending)

*** FULLY ASSIGNABLE 4-20 mA or 2-10 VDC OVER CHOSEN RANGE**

4 mA / 2 VDC may be set anywhere in range, 20 mA / 10 VDC may be set anywhere in range

Signal is assigned linearly between the two points
Signal may be rising or falling with gas concentration

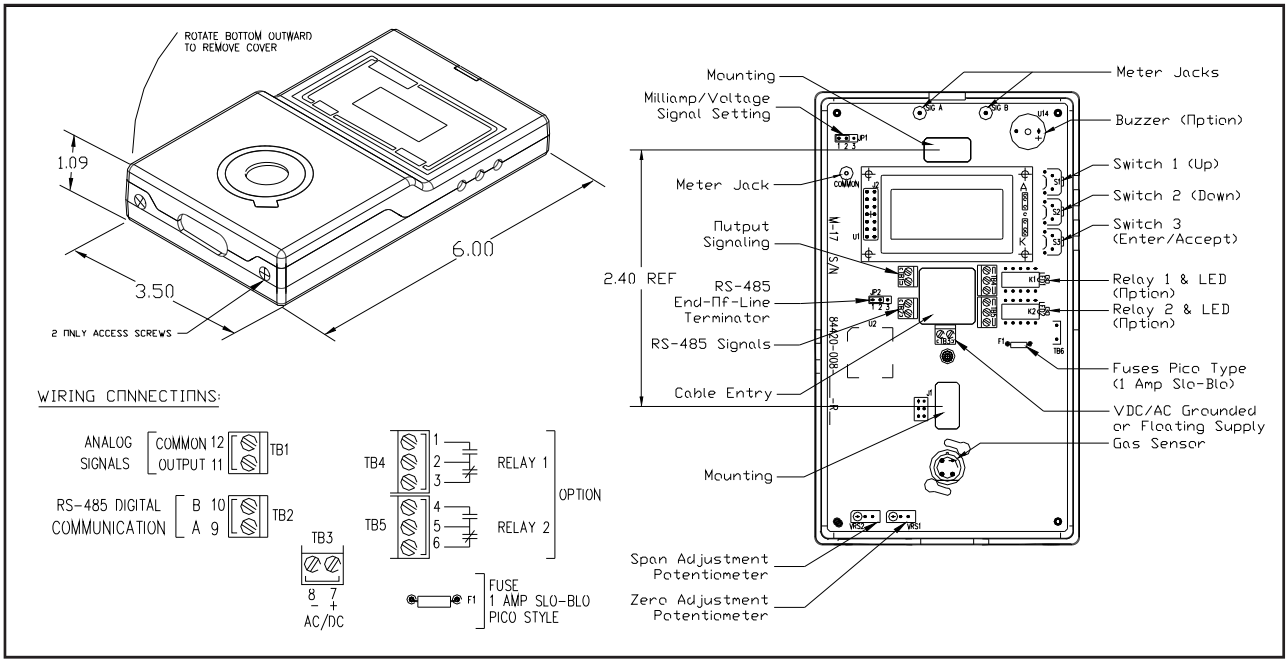

QUATROSENSE ENVIRONMENTAL LTD.
5935 OTTAWA STREET
RICHMOND, ONTARIO
CANADA K0A 2Z0
PHONE 1 613 838 4005
FAX 1 613 838 4018
email: QEL@QELsafety.com
www.QELsafety.com

This brochure includes general specifications which are subject to change without notice. Ensure a complete understanding of all applicable Federal, State, Provincial and Local Health and Safety laws and regulations before using these products.

Read and understand fully all instructions before using these products

H/Sales/Marketing/Specification/M17/Aug08.cdr

DISTRIBUTED BY